ICP Electronics Australia Pty Ltd
ICP Electronics Australia Pty Ltd
Ph: (02) 9457 6011 Fax: (02) 9457 6444
www.icp-australia.com.au sales@icp-australia.com.au
Unit 14, 12 Yatala Rd / PO Box 79
Mt KURING-GAI NSW 2080
ABN: 53 089 161 580

Heavy Industrial Panel PC

New

12”/15”/17” Fanless Intel® Bay Trail Solution

Features

- Support IEI iRIS-2400 remote intelligent solution
- Intel® Celeron® J1900 quad-core SoC
- Robust IP65 aluminum front bezel
- Aesthetic ultra-thin bezel for seamless panel mount installation
- Projected capacitive multi-touch and resistive single touch options
- Dual full-size PCIe Mini card expansion
- 9V~36V DC wide range DC input

iRIS™ IPMI 2.0 Compliant | Multi-touch | IP65 | PCIe Mini | USB 3.0 | Fanless | MOUNT

Specifications

Model		PPC-F12B-BT (Fanless)	PPC-F15B-BT (Fanless)	PPC-F17B-BT (Fanless)
LCD	LCD Display	12” (4:3)	15” (4:3)	17” (5:4)
	Max Resolution	1024 (W) x 768 (H)	1024 (W) x 768 (H)	1280 (W) x 1024 (H)
	Brightness (cd/m²)	600	400	350
	Contrast Ratio	700 : 1	700 : 1	800 : 1
	LCD Color	16.2M	16.2M	16.7M
	Pixel Pitch (mm)	0.24 x 0.24	0.29 x 0.29	0.26 x 0.26
	Viewing Angle (H-V)	160° / 140°	160° / 140°	170° / 160°
	Backlight MTBF (hrs)	50000	50000	50000
Motherboard	CPU	Intel® Celeron® processor J1900 (2M cache, up to 2.42 GHz)		
	RAM	2 x 204-pin DDR3L SO-DIMM slot (max. 8GB), pre-installed with 2GB		
Touch	Touchscreen	5-wire resistive single-touch type flat touchscreen / 2-point projected capacitive type touchscreen		
Input Interfaces	I/O Ports & Switches	2 x RJ-45 LAN port 2 x USB 3.0 2 x USB 2.0 1 x HDMI 2 x RS-232 1 x RS-232/422/485 1 x VGA 1 x 9 V~36 V DC jack (4-pin) 1 x 9 V~36 V DCTerminal block 1 x Line-out (PPC-F15B and PPC-17B only) 1 x Power switch		
	Expansion	1 x Full-size PCIe Mini card slot (with PCIe and USB signal) 1 x Full-size PCIe Mini card slot colay mSATA (SATA2 only) (with PCIe and USB signal)		
Wireless LAN		802.11 a/b/g/n/ac + Bluetooth v4.0 wireless kit (SMA antenna) (optional)		
Drive Bay		1 x 2.5” HDD/SSD drive bay		
iRIS Remote Management Solution		iRIS-2400 slot		
Physical	Construction Material	Aluminum front panel and sheet metal rear cover		
	Mounting	Panel Mount/ Rack Mount/ 100 x 100 VESA Mount		
	Enclosure Color	Black C		
	Dimensions (mm) (W x L x D)	262.2 x 322.2 x 47.2	303 x 378.5 x 46.2	341.4 x 408.4 x 51.8
	Weight (Net)	3.2kg	3.1kg	5kg
	Cutout Dimensions (mm)	244.8 x 304.8	285.6 x 361	323 x 390
Environment	Operating Temperature (with air flow)	-10°C~50°C (14°F~122°F)		
	Storage Temperature	-20°C~60°C (-4°F~140°F)		
	Humidity	10% to 95% (non-condensing)		
	IP Level	IP 65 compliant front panel		
	Safety and EMC	CE & FCC Class A certified		
Power Input		9 V~36 V DC		
Power Consumption		40W	41W	42W

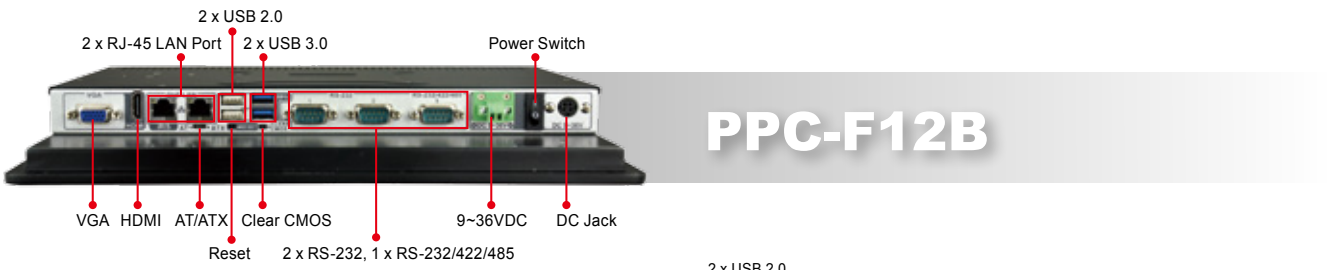

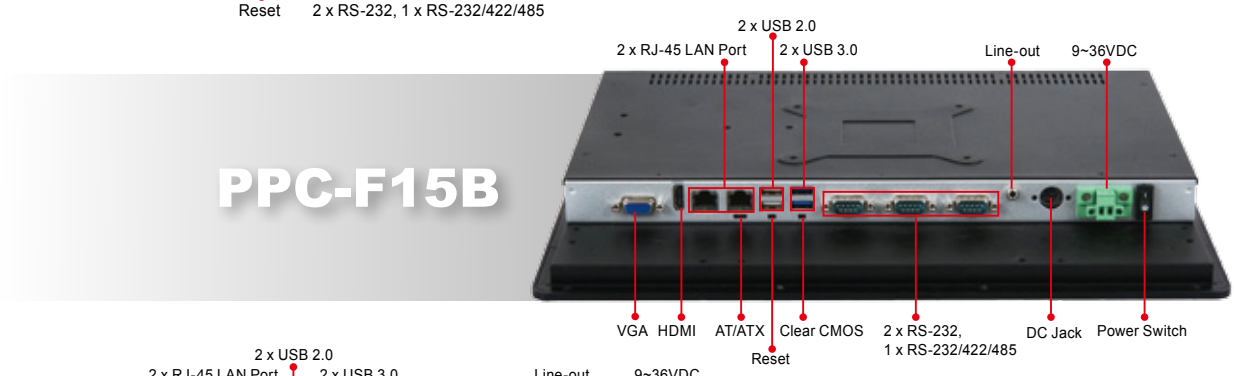

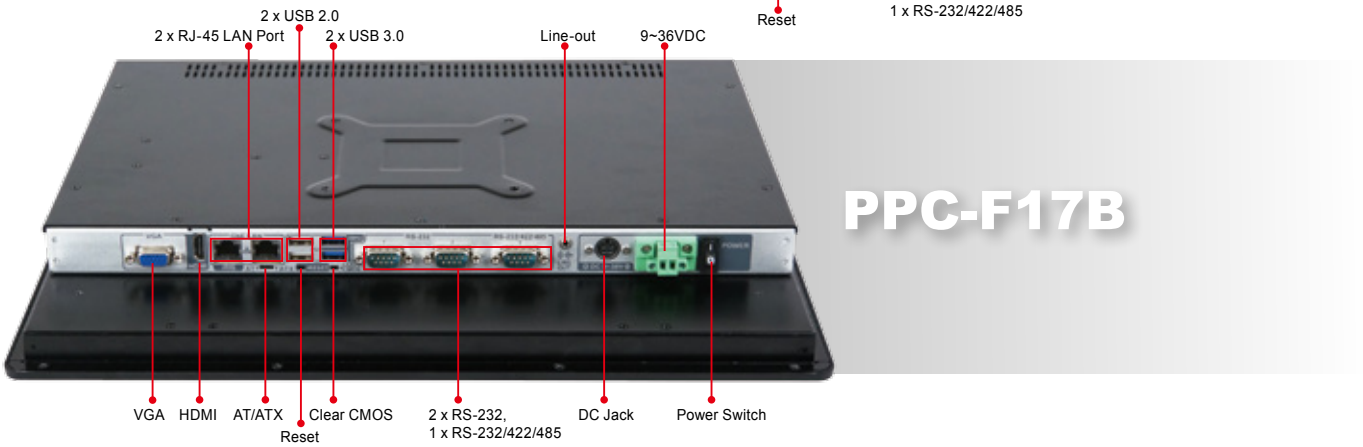

Options

Item	PPC-F12B	PPC-F15B	PPC-F17B
ARM	ARM-31-RS	ARM-31-RS	ARM-31-RS
Stand	STAND-C12-R10 STAND-A12-RS	STAND-C19-R10 STAND-A19-RS	STAND-C19-R10 STAND-A19-RS
Wall Mount Kit	WK-190MS-R10		
Panel Mount Kit	FPK-09-R10	FPK-10-R10	FPK-10-R10
Rack Mount Kit	FRK12-R10	FRK15-R10	FRK17-R10
Wi-Fi Kit	PPC-WL-KIT02-R11		
iRIS Kit (IEI Remote Intelligent System)	iRIS-2400-RS		

Packing List

Item	Q'ty	Remark
PPC-FxxB-BTi Panel PC	1	
User Manual & Driver CD	1	
One Key Recovery CD	1	
Touch Pen	1	Resistive type models only P/N: 43125-0002C0-00-RS
Power Cord	1	Part numbers varies by regions
Screw Pack	1	Including necessary screws
Power Adapter	1	9V~36V DC

Ordering Information

Part Number		Description
12"	PPC-F12B-BTi-J1/2G/R-R10	12" 600 cd/m² XGA panel PC with Intel® Celeron® processor J1900, TDP 10W, one 2 GB RAM, support iRIS-2400, black color, 9-36V DC input, resistive touch window, R10
	PPC-F12B-BTi-J1/2G/PC-R10	12" 600 cd/m² XGA panel PC with Intel® Celeron® processor J1900, TDP 10W, one 2 GB RAM, support iRIS-2400, black color, 9-36V DC input, projected capacitive touch window, R10
15"	PPC-F15B-BTi-J1/2G/R-R10	15" 400 cd/m² XGA panel PC with Intel® Celeron® processor J1900, TDP 10W, one 2 GB RAM, support iRIS-2400, black color, 9-36V DC input, resistive touch window, R10
	PPC-F15B-BTi-J1/2G/PC-R10	15" 400 cd/m² XGA panel PC with Intel® Celeron® processor J1900, TDP 10W, one 2 GB RAM, support iRIS-2400, black color, 9-36V DC input, projected capacitive touch window, R10
17"	PPC-F17B-BTi-J1/2G/R-R10	17" 350 cd/m² SXGA panel PC with Intel® Celeron® processor J1900, TDP 10W, one 2 GB RAM, support iRIS-2400, black color, 9-36V DC input, resistive touch window, R10
	PPC-F17B-BTi-J1/2G/PC-R10	17" 350 cd/m² SXGA panel PC with Intel® Celeron® processor J1900, TDP 10W, one 2 GB RAM, support iRIS-2400, black color, 9-36V DC input, projected capacitive touch window, R10

PPC-F12B
Dimensions *(Unit: mm)*

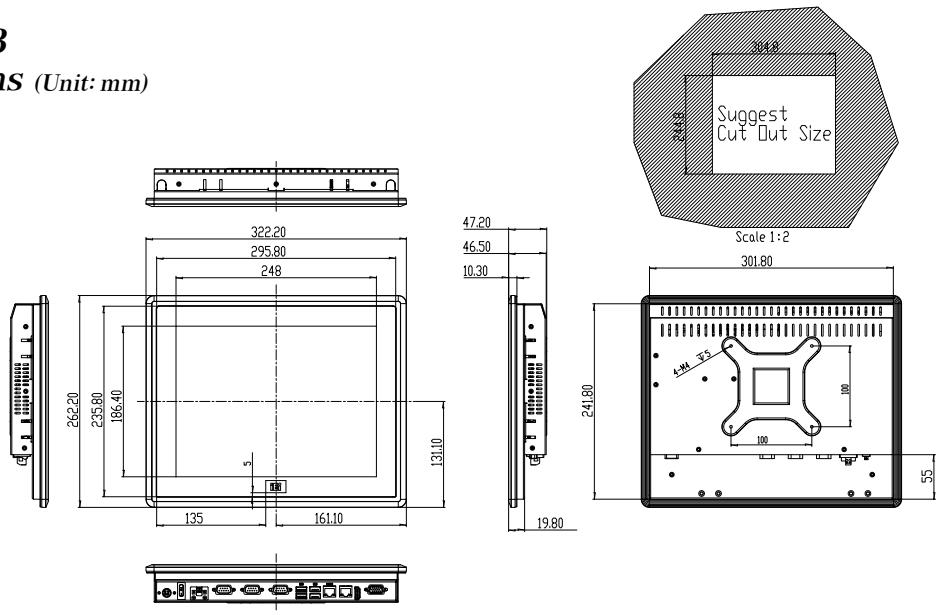

PPC-F15B
Dimensions *(Unit: mm)*

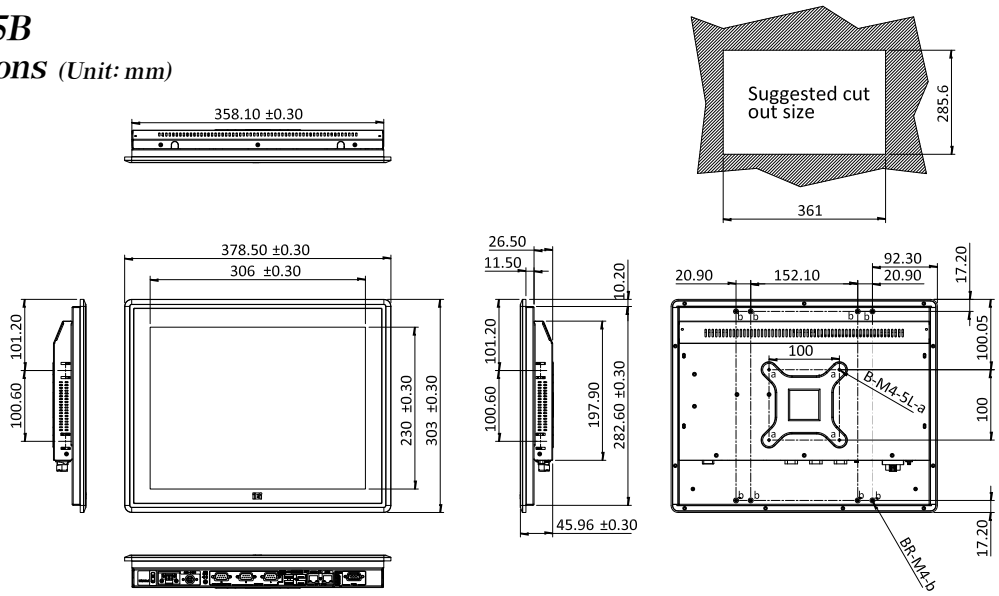
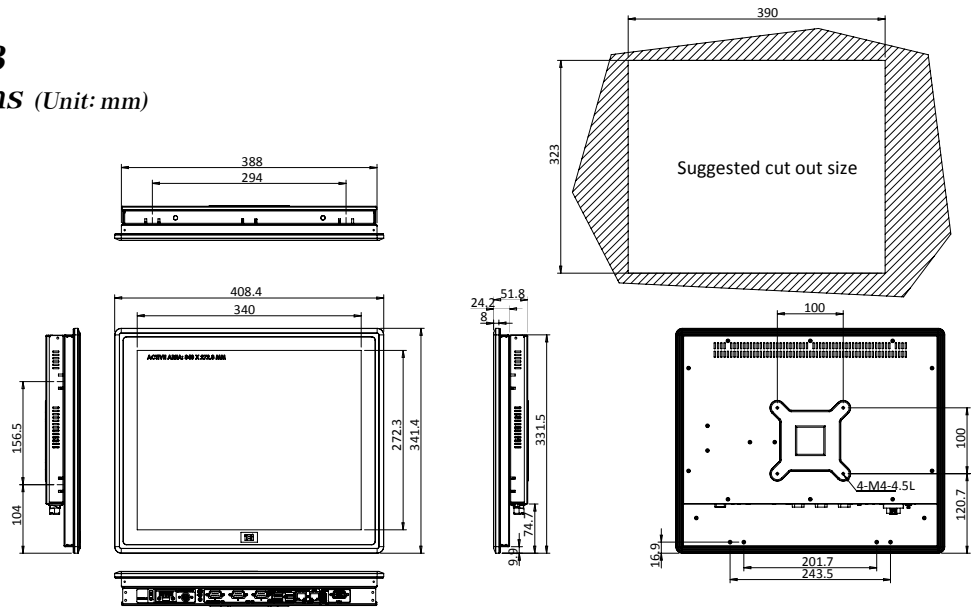
PPC-F17B
Dimensions *(Unit: mm)*